50051-C

SHEET 2 OF 4

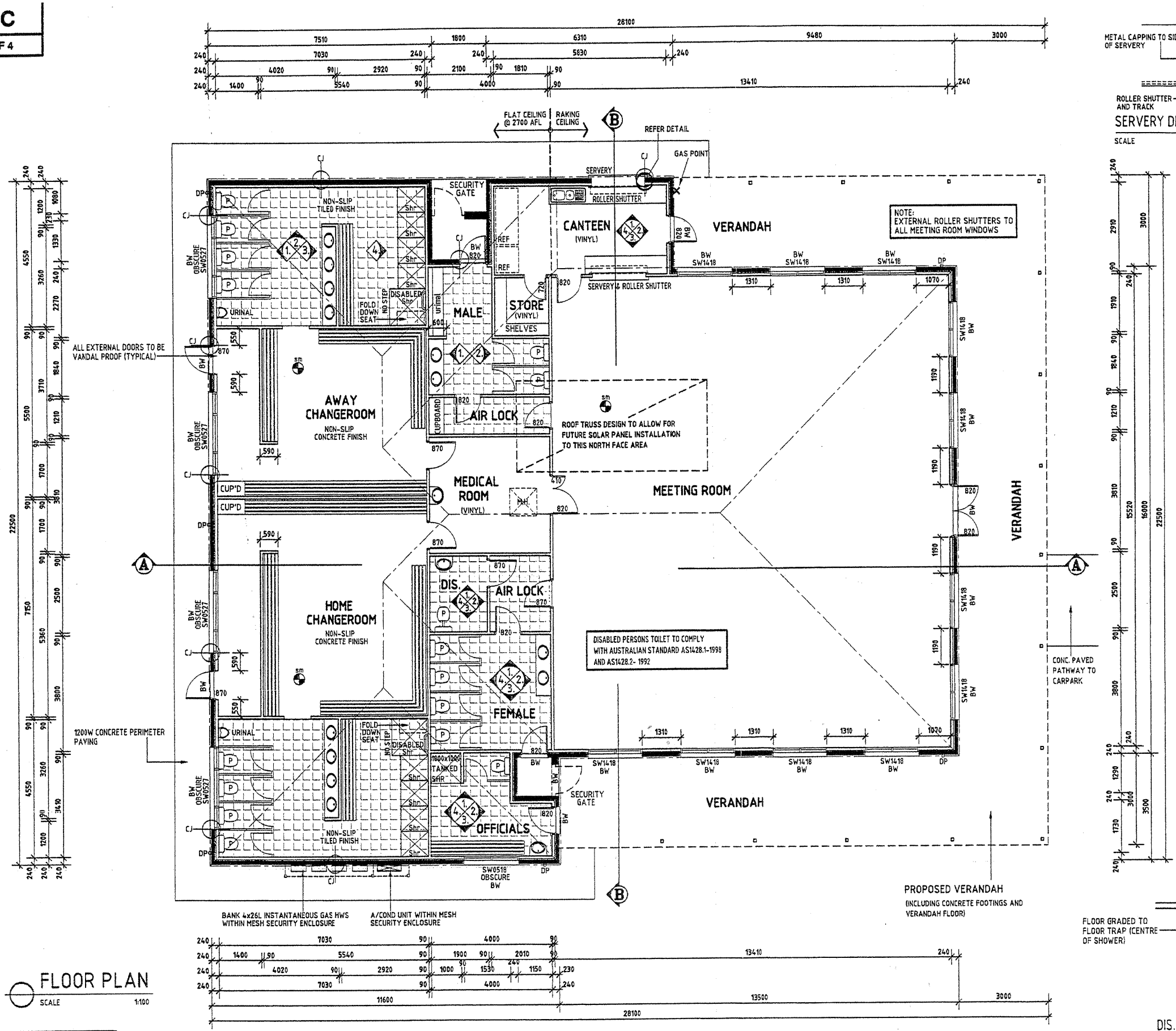

FLOOR PLAN

SCALE 1:100

NOTES:
TRIM CEILING PARALLEL TO ALL ANGLED WALLS.
TRIM ALL VALLEY & HIP INTERSECTIONS FOR CEILING LINING.

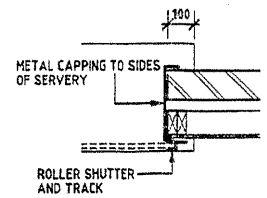

SERVERY DETAIL

SCALE 1:20

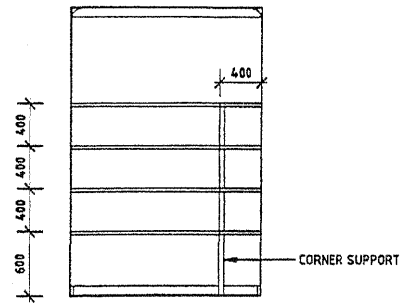

STOREROOM SHELF DETAIL

SCALE 1:50

CONSTRUCTION NOTES

- Powder coated Alum. windows with -
  security screens to ablution areas &
  external roller shutters to meeting room windows
- Vandal proof external doors as noted below -
  'Lietzke' Security 1 Doors - Squareline door with SHS perimeter sub-frame & solid polystyrene core sheeted with pre-painted Colorbond steel (colour to match windows). Door shall be pre-hung in metal door frame to suit full width brick veneer external wall & pre-fitted with locks and hardware to be specified.
- Vinyl Floor coverings to canteen/store/medical - to be slip resistant (Eminent Safe-T or similar)
- Plasterboard internal wall & ceiling linings - painted
- Fibre Cement wall linings to ablution areas - tiled & painted
  6mm Villaboard wall linings to Dis/Male/Female/Officials & Canteen
  9mm Villaboard wall linings to Home & Away Changerooms & Ablutions
- Gas supply for H.W.U's
- All roof stormwater to rain water tank & plumbed back to WC's and urinals
- Solid core (paint grade finish) internal doors (Not including cubicles)
- Provision for Air Cond. to meeting room / canteen
- Perimeter Conc. paths around ablution block only
- Insulation to external walls (R2.0) & ceilings (R3.0)
- BBQ gas point
- Water/ Power/Sewer & Stormwater services in accordance with design documentation from TMK Consulting Engineers

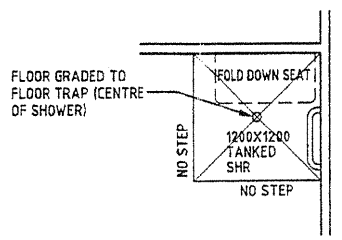

DIS. SHOWER DETAIL

SCALE 1:50

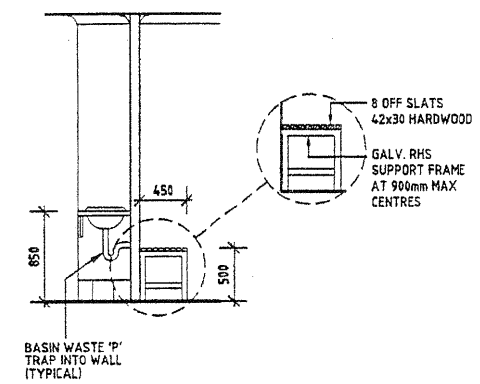

WET AREA DETAILS

SCALE 1:50

FAIRMONT HOMES GROUP PTY. LTD.
ABN 26 110 542 553
21 - 24 NORTH TERRACE
ADELAIDE 5000
PHONE 8112 3112

I / WE HAVE READ ARCHITECTURAL PLANS, ELEVATIONS & SELECTIONS THOROUGHLY & ACCEPT THESE PLANS AS FINAL FOR CONSTRUCTION.

FINAL PLAN APPROVED

/ /

PROPOSED DEVELOPMENT FOR : THE CITY OF TEA TREE GULLY
AT : "HARPERS FIELD" , ONE TREE HILL RD, GOLDEN GROVE

AREAS sqm			
Amenities	271.66	drawn :	CF
Meeting Room	217.40	date :	14/1/08
TOTAL	489.06	checked :	R.C.D. / TTG
(Verandah	134.94)	date :	8/2/08
		council :	TEA TREE GULLY

WRITTEN DIMENSIONS ARE TO BE TAKEN IN PREFERENCE TO SCALED DRAWINGS. CONTRACTORS TO VERIFY LEVELS AND DIMENSIONS ON SITE PRIOR TO COMMENCEMENT OF BUILDING SET OUT.

LEGEND:

- MH : DENOTES 600 X 600 ROOF ACCESS DOOR
- D : ESCAPE HINGES WHERE SHOWN
- SM : SH : DENOTES SELF CONTAINED SMOKE ALARM AS PER A.S. 3786 , HARD WIRED

NOTES:

- CJ : DENOTES CONTROL JOINT IN B/WORK
- BQ : DENOTES BRICK QUOIN
- RQ : DENOTES RENDERED QUOIN
- RB : DENOTES RENDERED BAND
- BW : DENOTES BRICKWORK OVER OPENING
- IP : DENOTES INFILL PANEL OVER OPENING
- DP : DENOTES DOWNPIPE
- LL : DENOTES STICK ON LEADLIGHT

WINDOW GLAZING: AS PER A.S. 1288 (2006)
DOORS & WINDOWS: TO BE SELECTED, CONSTRUCTED & INSTALLED IN ACCORDANCE TO TIMBER A.S. 2146 & 2147, ALUMINUM A.S. 2047 & 2048
TIMBER FRAMES / BRACING / TIE DOWNS: AS PER A.S. 1684.2 (1999)
HOT WATER SERVICE: AS PER A.S. 1529 (2.5 STAR RATING MIN.)
TERMITE PROTECTION: AS PER A.S. 3660.1 (2000)
BUSH FIRE REQUIREMENTS AS PER A.S. 3959
SEPTIC TANK AS PER SOUTH AUSTRALIAN HEALTH COMMISSION

AMENDMENTS :	DATE
Door swings to changerooms altered to swing out	4/4/08
Changeroom doors increased to B70; Showers altered to include a disabled shower	5/5/08
At clients instruction Meeting Room increased in size which has also required amendments to layouts	
to Officials room, Female & Male toilets, Medical room, Canteen and Storeroom	28/7/08
Perimeter paving indicated; internal door note added;	10/9/08